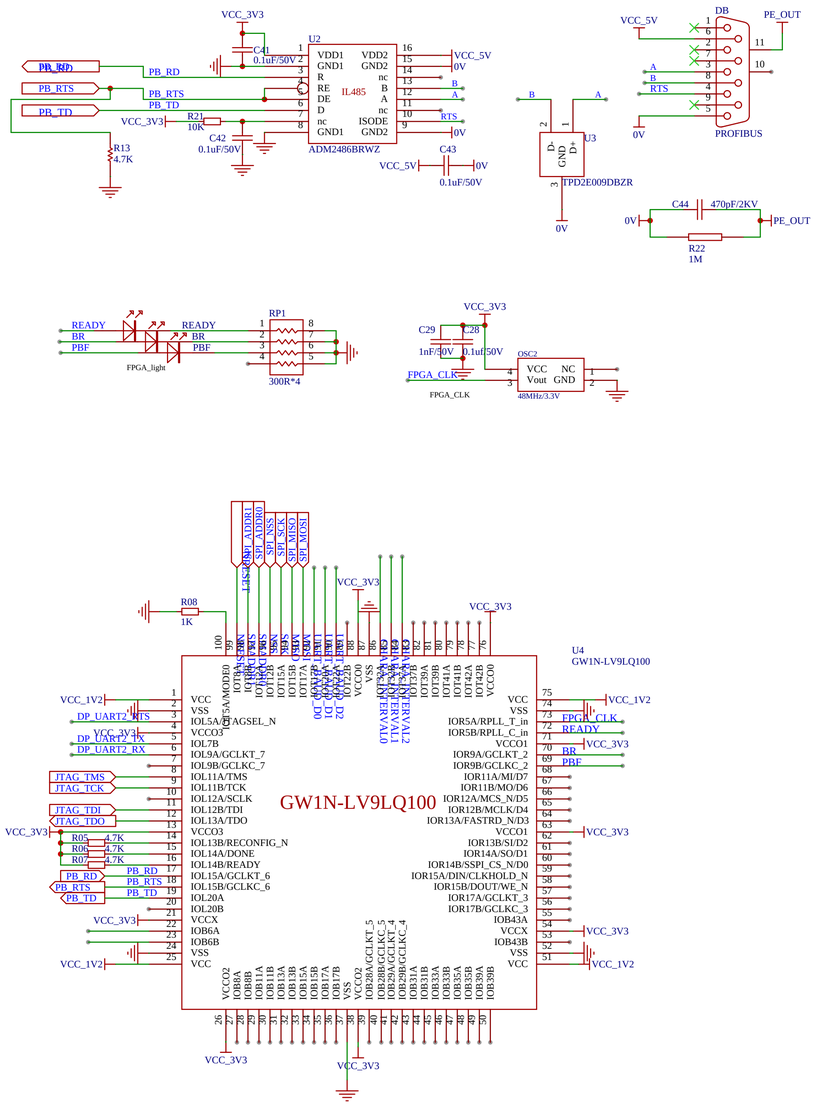











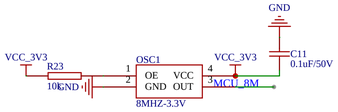


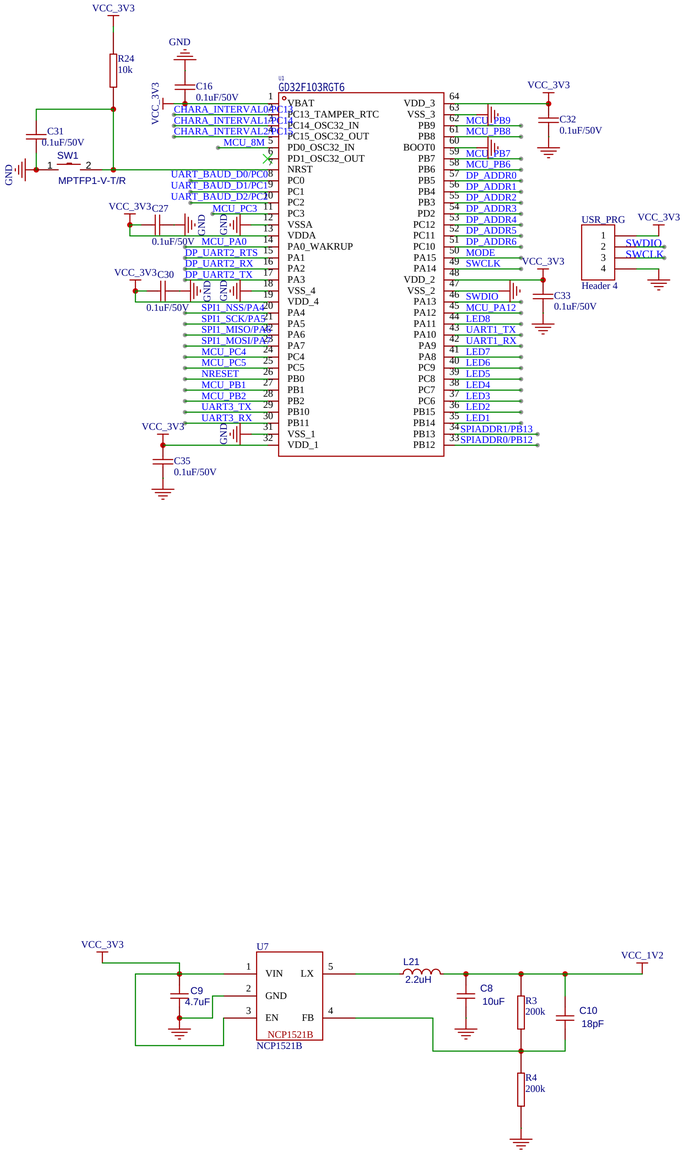


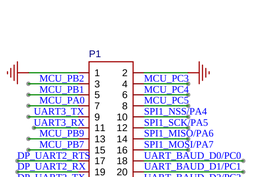


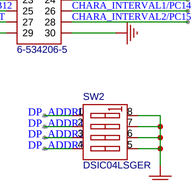


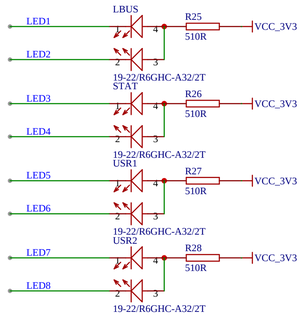





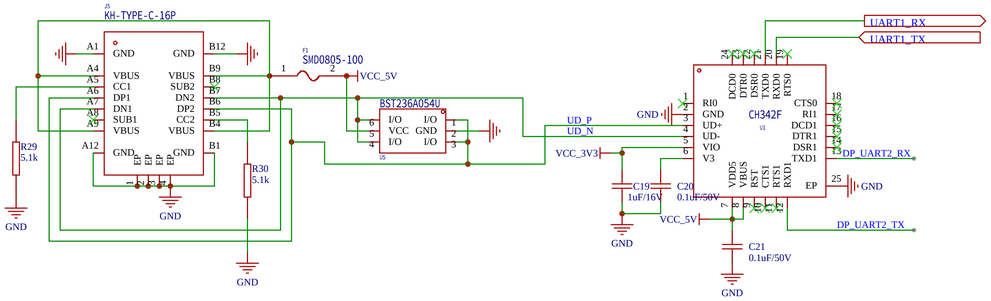


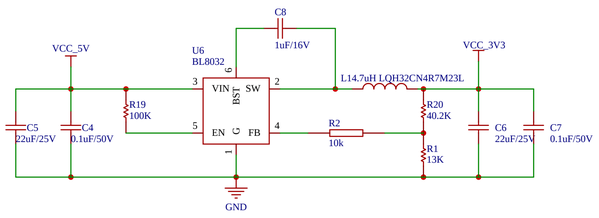


| | | | |
|---|---|---|---|
| Schematic | Schematic1 | Update Date | 2023-03-24 |
| Page | | Create Date | |
| Drawed | | Part Number | |
| Reviewed | | PB_M2_GOWIN_Evaluation_board_20230313 | |
| | | VER | SIZE | PAGE | OF |
| 嘉立创EDA | | V1.0 | A4 | | |